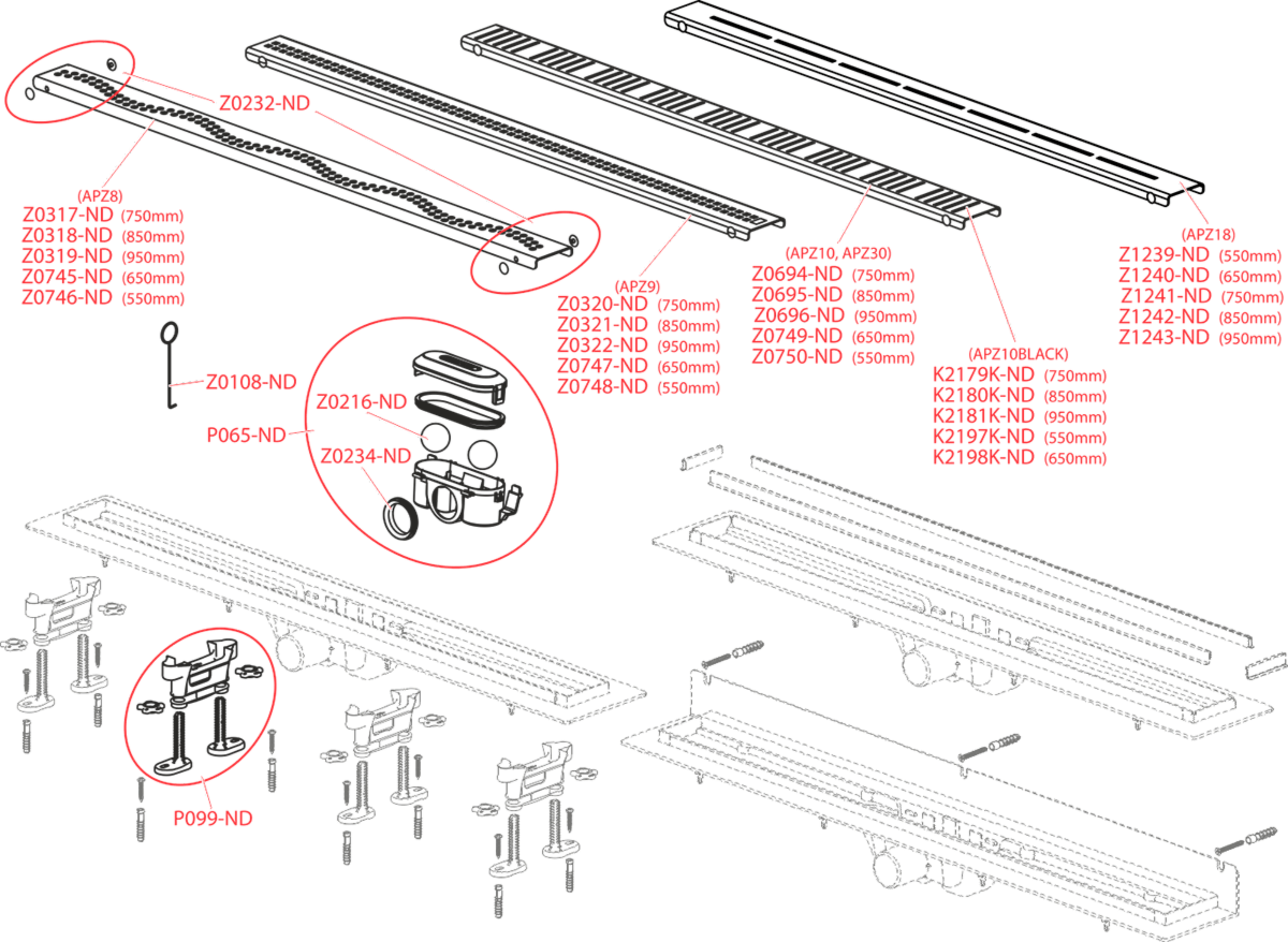
Z0232-ND
(APZ8)
Z0317-ND (750mm)
Z0318-ND (850mm)
Z0319-ND (950mm)
Z0745-ND (650mm)
Z0746-ND (550mm)
(APZ9)
Z0320-ND (750mm)
Z0321-ND (850mm)
Z0322-ND (950mm)
Z0747-ND (650mm)
Z0748-ND (550mm)
(APZ10, APZ30)
Z0694-ND (750mm)
Z0695-ND (850mm)
Z0696-ND (950mm)
Z0749-ND (650mm)
Z0750-ND (550mm)
(APZ10BLACK)
K2179K-ND (750mm)
K2180K-ND (850mm)
K2181K-ND (950mm)
K2197K-ND (550mm)
K2198K-ND (650mm)
(APZ18)
Z1239-ND (550mm)
Z1240-ND (650mm)
Z1241-ND (750mm)
Z1242-ND (850mm)
Z1243-ND (950mm)
Z0108-ND
Z0216-ND
P065-ND
Z0234-ND
P099-ND