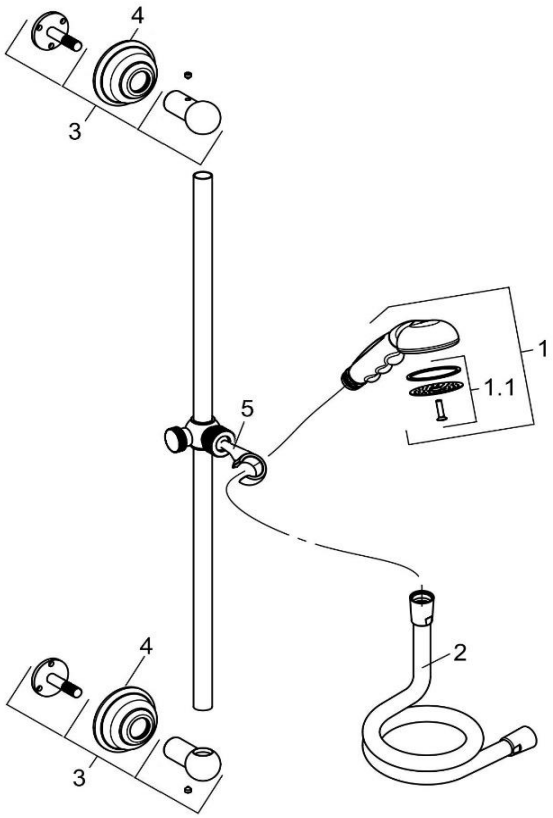


| 2710305 | | Brausegarnitur | Shower Combination |
|---|---|---|---|
| 1 | 7529505-00 | HANDBRAUSE | HANDSHOWER |
| 1.1 | 85503405-00 | SIEB | MESH |
| 2 | 6105605-00 | ROSETTE | ESCUTCHEON |
| 3 | 7708605-00 | WANDHALTER | WALLHOOK |
| 4 | 7582305-00 | ROSETTE | ESCUTCHEON |
| 5 | 7508605-00 | GLEITSCHIEBER | GILDER |
| | | | |
| | | | |
| | | | |
| | | | |
| | | | |
| | | | |
| | | | |
| | | | |
| | | | |
| | | | |
| | | | |
| | | | |
| | | | |
| | | | |
| | | | |
| | | | |